KAGAMA

SERVO/RECEIVER BOX

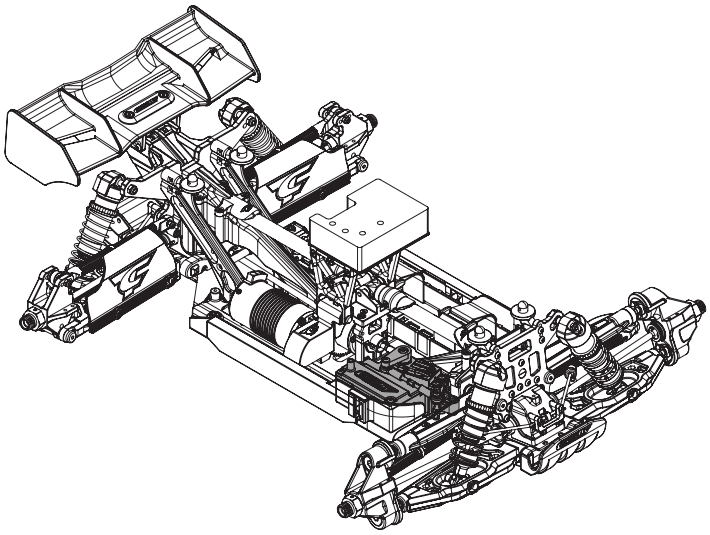

Required Tools:

- 2.0 Hex Driver
- 2.5 Nutdriver
- 4.0 Wrench (optional)

STEP 1

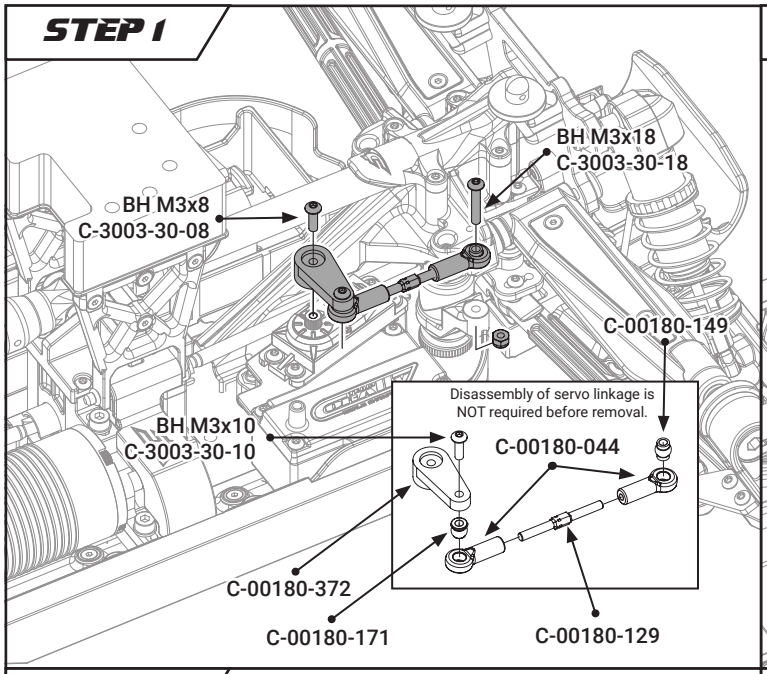

STEP 2

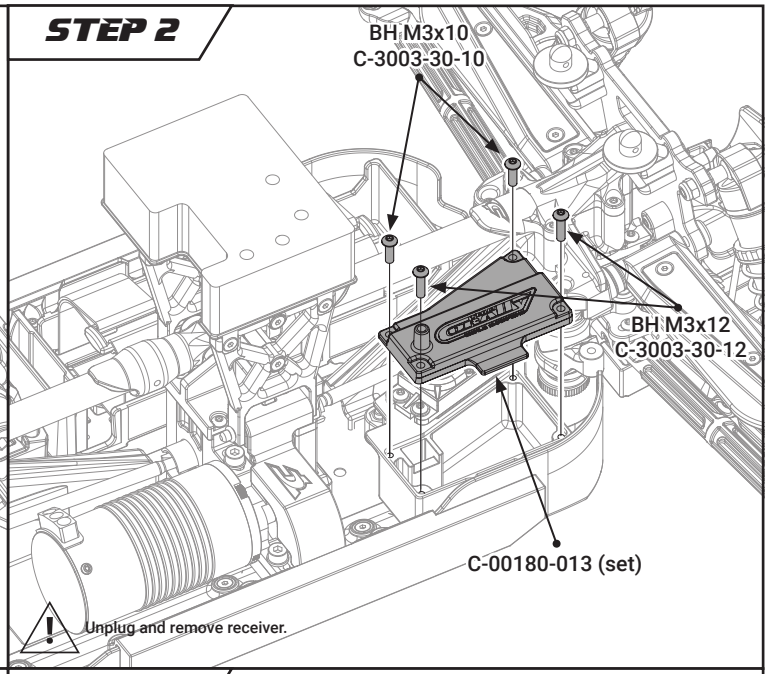

STEP 3

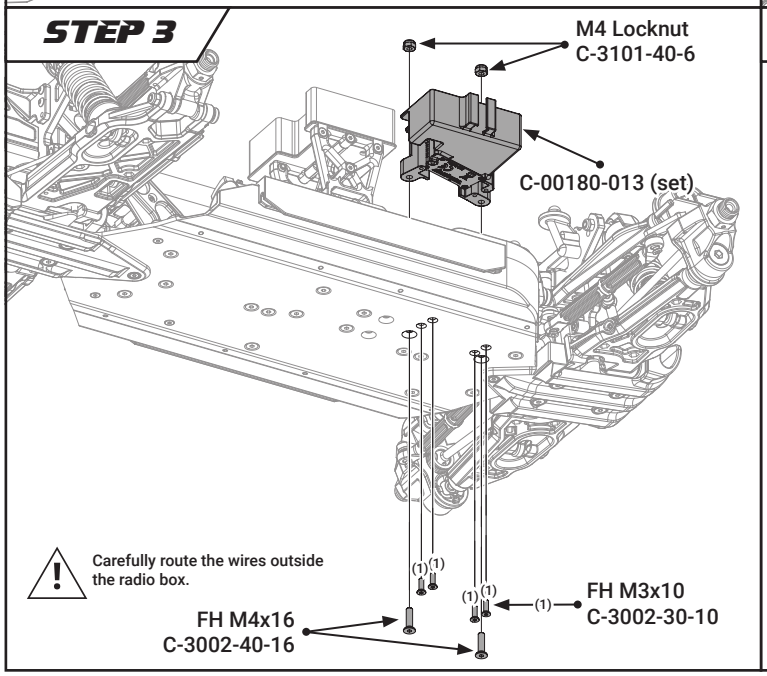
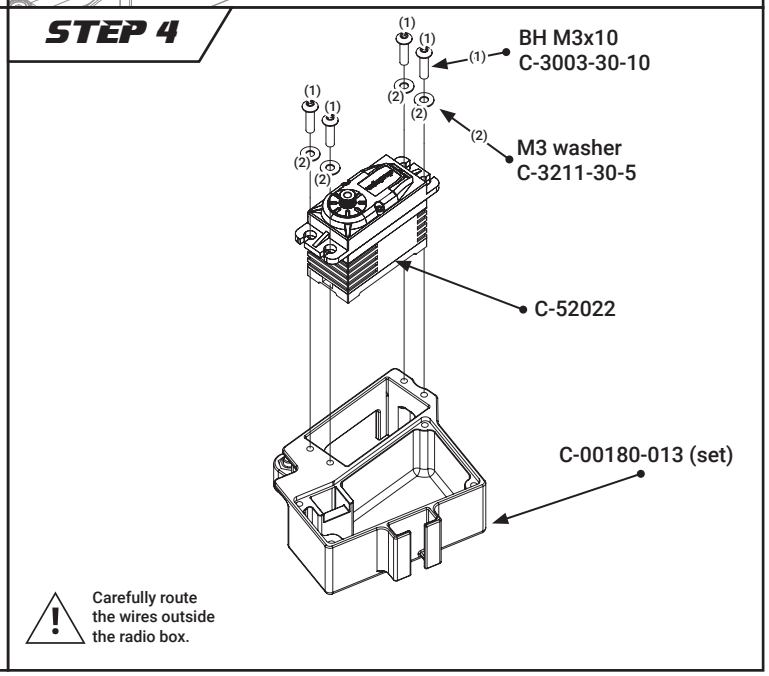
STEP 4